Rev.	Modification	Date	Draft.	Approv.
2	Changed references the table of materials SCD.N°038/11	05.05.11	André	Adilson
1	Reference from 23106 to 8.03.11.02 Tables SCD.N°146/05	07.06.05	André	Adilson

SANTA TEREZINHA - ENGINEERING
NON-CONTROLLED COPY

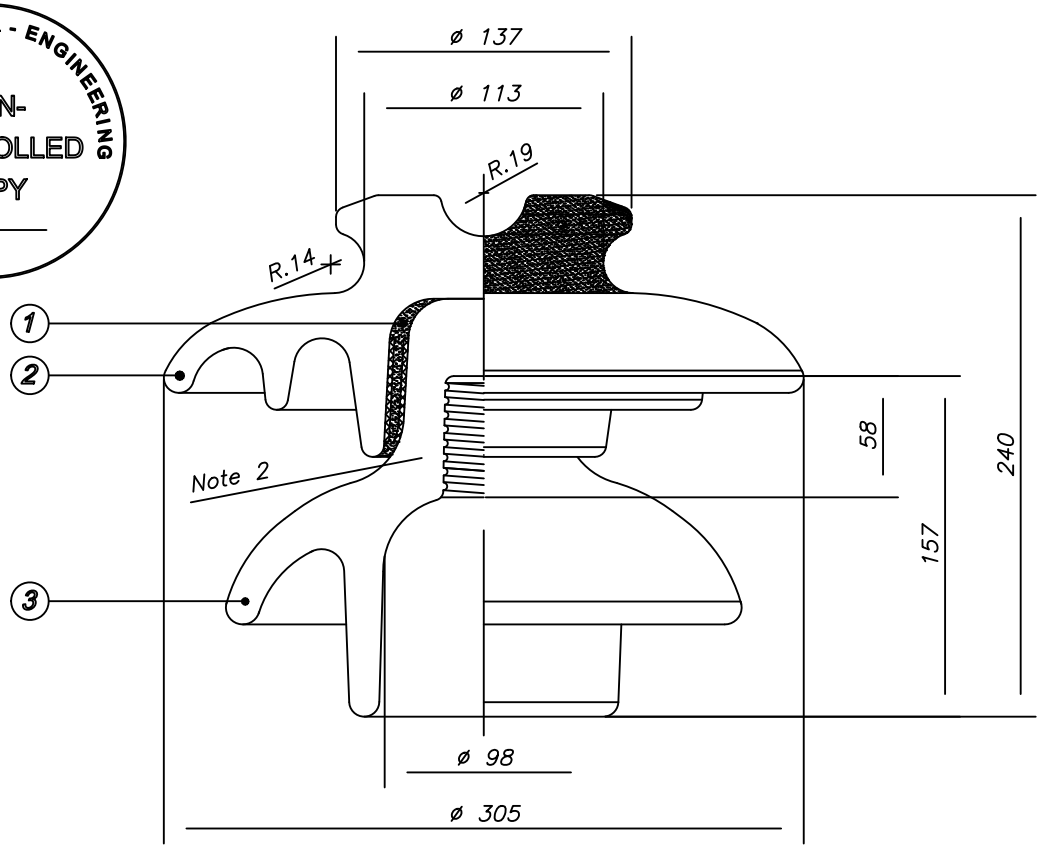

References	CST	803.1102	
	ANSI C29.6	56–4	
Leakage Distance		mm	686
Cantilever Strength		kN	13.6
Impulse Withstand Voltage		kV	170
Low Frequency Withstand Voltage	Wet	kV	70
Low Frequency Puncture Voltage		kV	185
Low Frequency Flashover Voltage	Dry	kV	140
	Wet	kV	95
Critical Impulse Flashover Voltage	Positive	kV	225
	Negative	kV	310
Radio Influence Voltage	Low Frequency Test Voltage	kV	30
	RIV	µV	200

NOTES

1– All dimensions are in millimeters.

2– Thread: 1.3/8" as ANSI C29.6.

3– Tolerances unless specified: according IEC 60383.

Pos.	Qnt.	Description	Material	References
3	1	Porcelain Shell	Porcelain as to IEC 60672	803.1102.15.2
2	1	Porcelain Shell	Porcelain as to IEC 60672	803.1102.15.1
1	1	Cement	Cement class G	03.02171

Draft. André	Approv. Adilson	Replace ST.0834	Santa Terezinha
Date 17.12.98	Date 17.12.98	Weight kg. 11.80	

Sanded surface ▭ | Unglazed surface ▭

Description: PIN TYPE INSULATOR RADIO FREED

Scale: Without

N°: ST- 1233